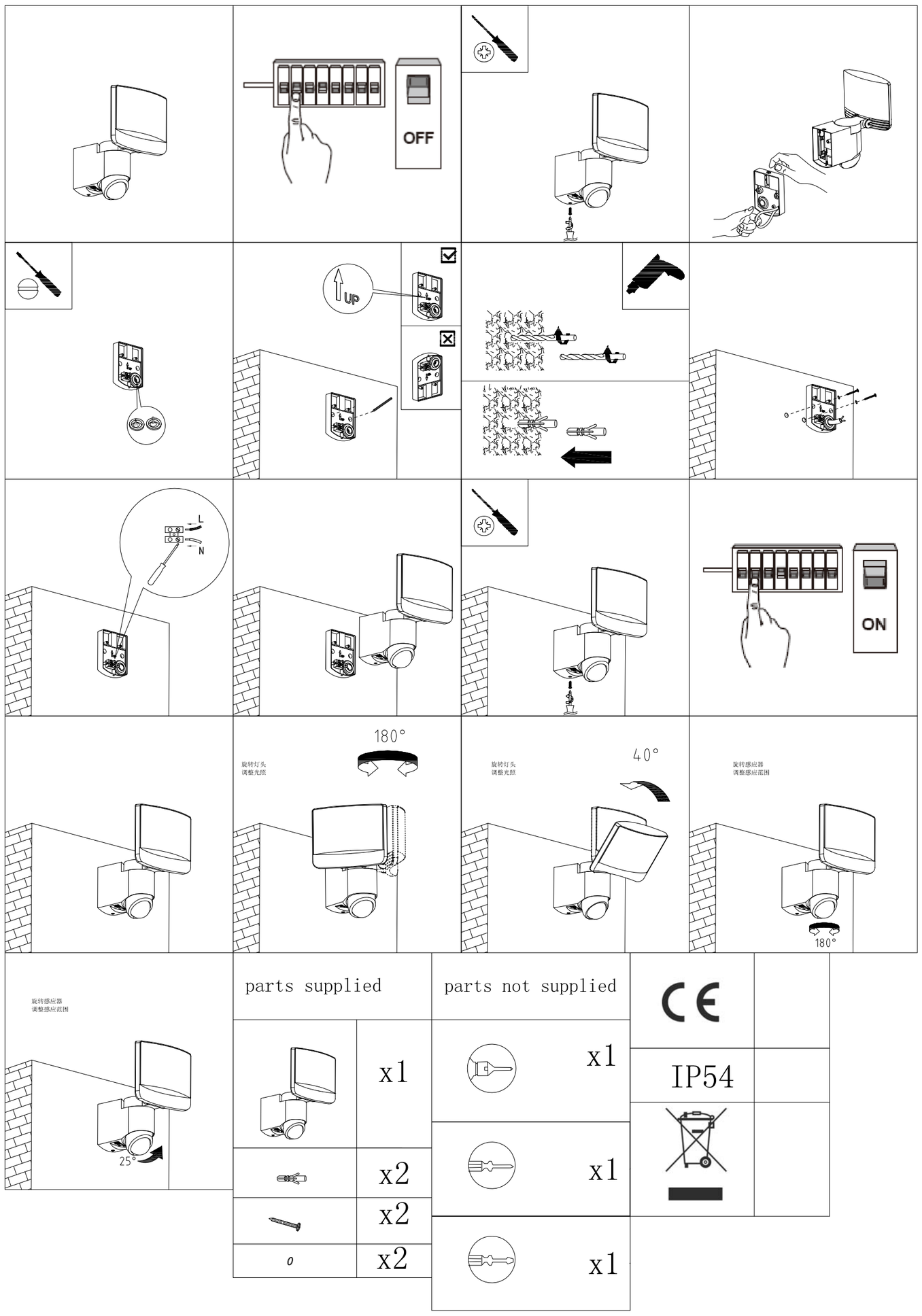
OFF
UP
L
N
ON
180°
旋转灯头
调整光照
40°
旋转感应器
调整感应范围
180°
旋转感应器
调整感应范围
25°
parts supplied
parts not supplied
x1
x1
x2
x1
x2
x2
x1
IP54

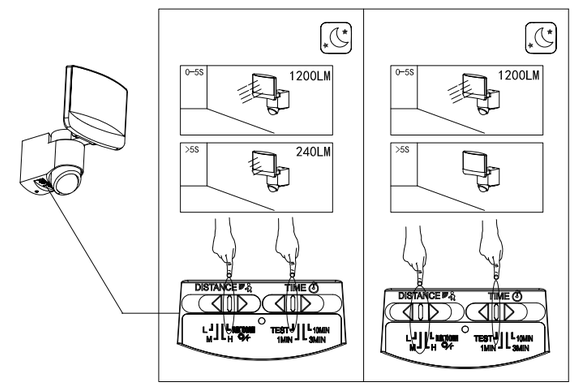
0~5S
1200LM
>5S
240LM
DISTANCE
TIME
TEST
1MIN
10MIN
3MIN

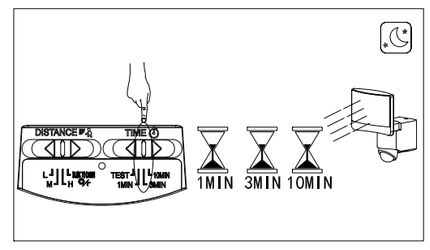
DISTANCE
TIME
1MIN
3MIN
10MIN

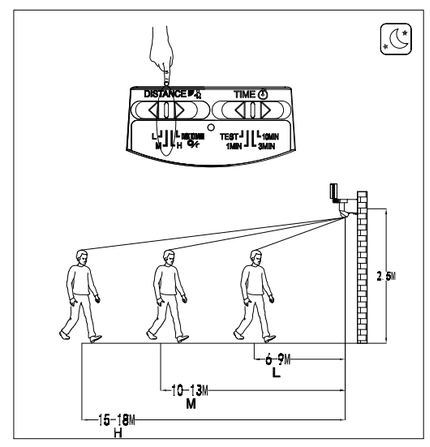
DISTANCE
TIME
TEST
2.5M
6-9M
L
10-13M
M
15-18M
H

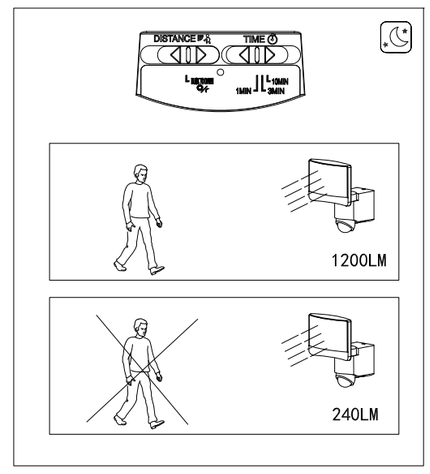
DISTANCE
TIME
1MIN
3MIN
1200LM
240LM

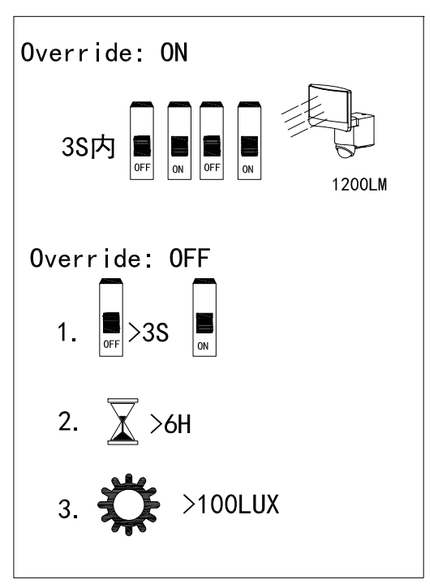
Override: ON
3S内
OFF
ON
OFF
ON
1200LM
Override: OFF
1.
OFF
>3S
ON
2.
>6H
3.
>100LUX

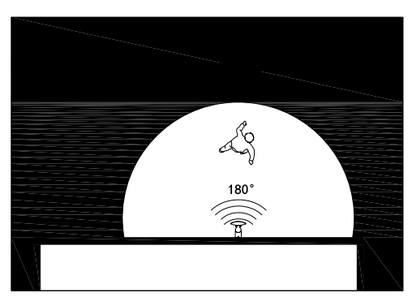
180°